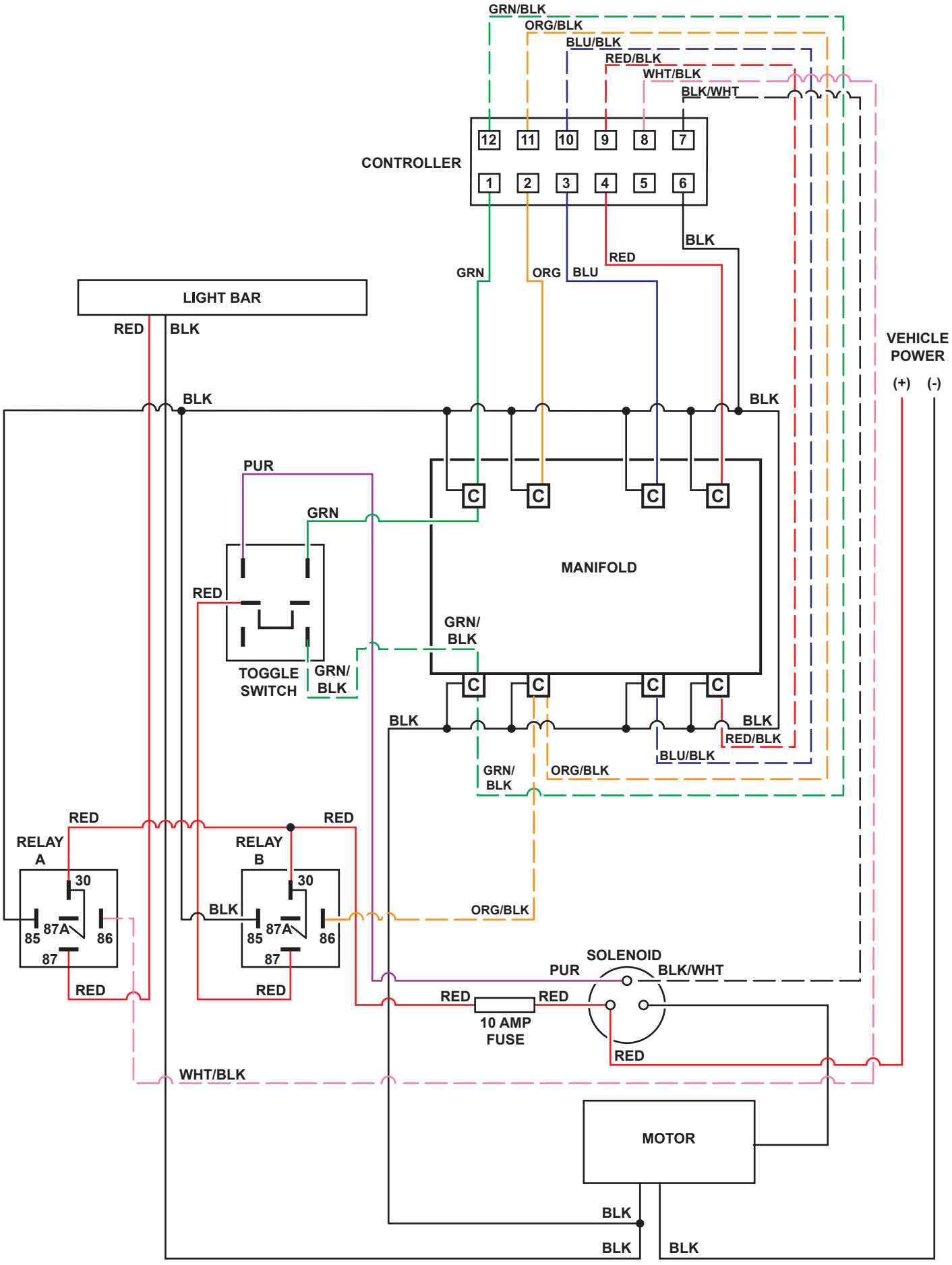
GRN/BLK
ORG/BLK
BLU/BLK
RED/BLK
WHT/BLK
BLK/WHT
CONTROLLER
12
11
10
9
8
7
1
2
3
4
5
6
BLK
RED
GRN
ORG
BLU
LIGHT BAR
RED
BLK
VEHICLE POWER
(+)
(-)
BLK
BLK
PUR
GRN
C
C
C
C
MANIFOLD
RED
GRN/ BLK
TOGGLE SWITCH
GRN/ BLK
C
C
C
C
BLK
BLK
RED/BLK
BLU/BLK
GRN/ BLK
ORG/BLK
RED
RED
RELAY A
RELAY B
30
30
BLK
ORG/BLK
85
87A
86
87
85
87A
86
87
RED
RED
SOLENOID
PUR
BLK/WHT
RED
RED
10 AMP FUSE
RED
WHT/BLK
MOTOR
BLK
BLK
BLK