Commercial Rear Plow System

HW16 Parts Manual

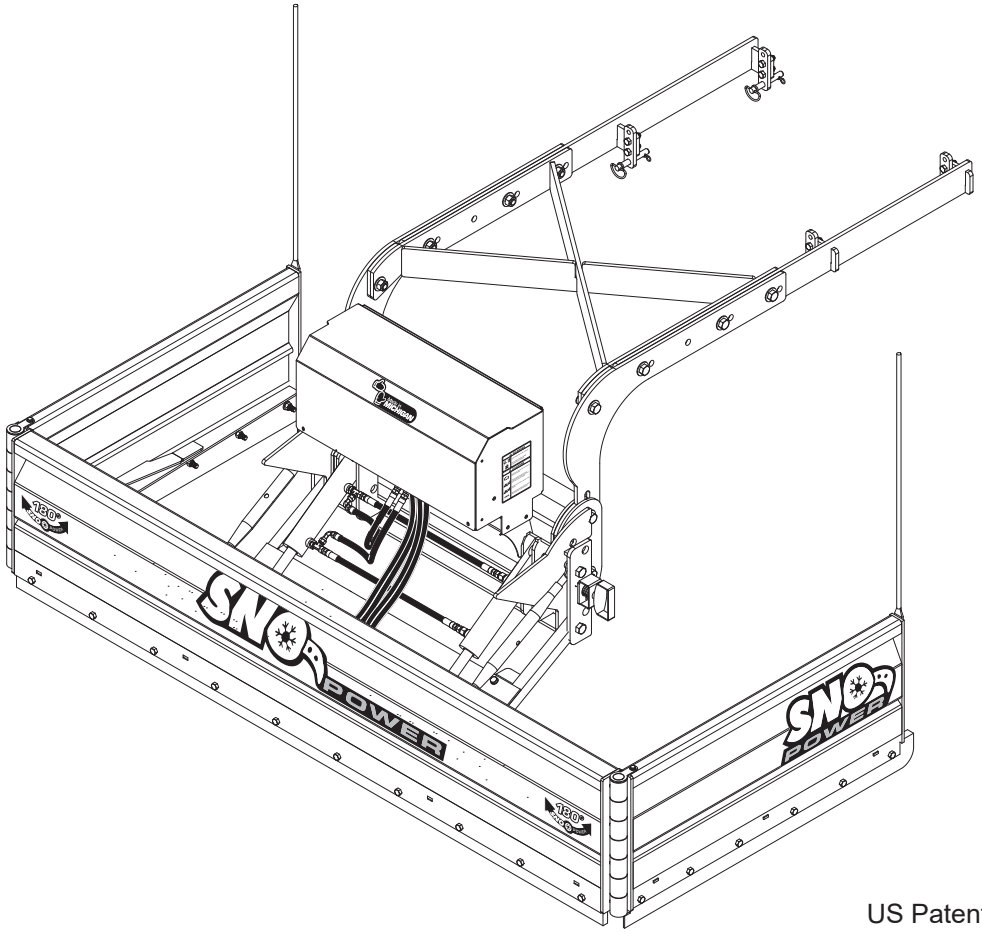

US Patent
US 9,555,746, B2

REV. October 2019

DECALS

	Part Number	Description	Quantity		Part Number	Description	Quantity
1	SP-17041D	Main Board Decal	1	4	SP-17043D	Warning Decal	1
2	SP-17042D	Wing Decal	2	5	SP-17044D	180° Decal	2
3	SP-17045D	Made in Michigan Decal	2		SP-17040D	Plow Decal Kit	1

1


SNO
POWER

2


SNO
POWER

3


Made in
MICHIGAN

4

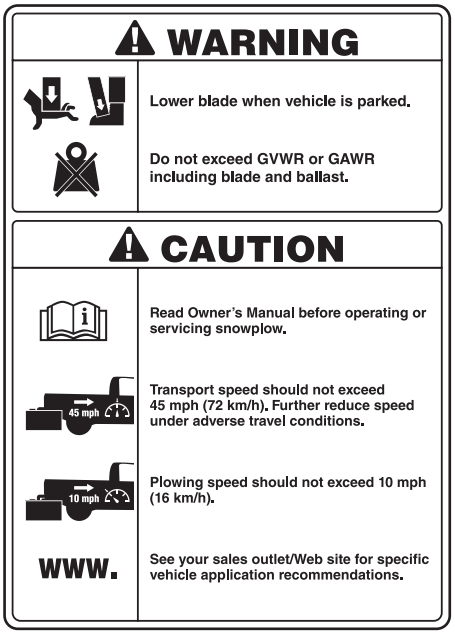
WARNING
Lower blade when vehicle is parked.
Do not exceed GVWR or GAWR including blade and ballast.
CAUTION
Read Owner's Manual before operating or servicing snowplow.
45 mph
Transport speed should not exceed 45 mph (72 km/h). Further reduce speed under adverse travel conditions.
10 mph
Plowing speed should not exceed 10 mph (16 km/h).
WWW.
See your sales outlet/Web site for specific vehicle application recommendations.

5


180°
SNO
POWER

REAR PLOW ASSEMBLY

	Part Number	Description	Quantity
1	17187	1/2-13 Nylock Nut	22
2	SP-18051	Cutting Edge, Short	2
3	17344	3/8-16 x 1 Flange Bolt Grade 5	6
4	SP-17045PM	Plow Marker	2
5	SP-F17020LW	Left Wing	1
6	17406	3/8-16 Hex Nut	6
7	17213	1/2-13 x 2-1/2 Hex Cap Screw	12
8	17373	3/4-10 x 5 Hex Cap Screw	4
9	17366	3/4-10 x 4 Hex Cap Screw	4
10	SP-F17026	Bell Crank	2
11	SP-F17027	Bell Crank Adjustment Bolt	2
12	SP-F17028	Bell Crank Turnbuckle	2
13	17190	3/4-10 Nylock Nut	8
14	15124	1/2 SAE Washer	22
15	SP-F17007	Wing Pin	2
16	SP-18050	Cutting Edge, Long	1
17	SP-F17000	Main Board	1
18	SP-F17021RW	Right Wing	1
19	15215	1/2-13 x 3 Hex Cap Screw Grade 8	10

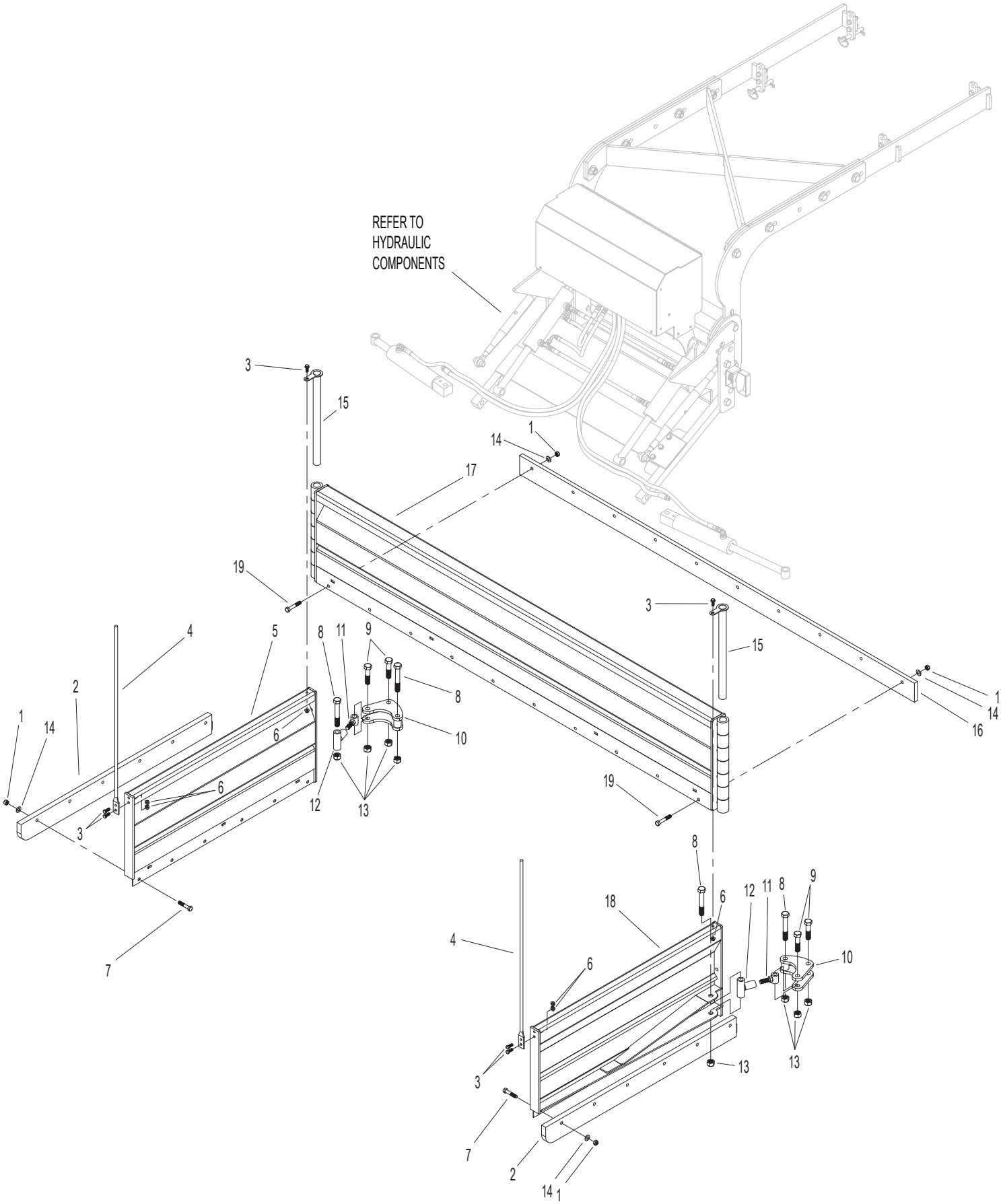
REFER TO
HYDRAULIC
COMPONENTS
1
2
3
4
5
6
7
8
9
10
11
12
13
14
15
16
17
18
19

HYDRAULIC COMPONENTS

	Part Number	Description	Quantity
1	SP-17050	Hose and Fitting Kit (Includes Abrasion Sleeve)	1
2	SP-17004	Wing Cylinder	2
3	17368	3/4-10 x 3-1/2 Hex Cap Screw	2
4	17190	3/4-10 Nylock Nut	14
5	SP-17005	Lift Cylinder	2
6	17373	3/4-10 x 5 Hex Cap Screw	4
7	17366	3/4-10 x 4 Hex Cap Screw	8
8	SP-17PPU-1	Manifold	1
9	SP-17PPU-2	2-Way Solenoid Valve	1
10	SP-17PPU-3	12VDC Coil, Size 08	1
11	SP-17PPU-4	4-Way Solenoid Valve	3
12	SP-17PPU-5	12VDC Coil, Size 10	6
13	SP-17PPU-6	Power Unit Assembly	1
14	SP-PU-2	Relief Valve	3
15	SP-17PPU-8	Needle Valve	1
16	15313	1/4-20 x 1/2 Cap Screw With Plastic Knob	2
17	SP-17PPU-10	1/4-20 S.H.C.S. x 3 Lg.	6
18	SP-17PPU-11	O-Ring	2
19	SP-F17023BC	Power Box Cover	1
20	SP-F17022PB	Power Box	1
21	15061	1/4-20 Riv Nut	2
22	17999	1/4 x 2-1/2 Roll Pin	2
23	SP-F17010	Carriage Pin	2
24	SP-18136	1 x 10 Gauge Machine Bushing	2
25	SP-17015	Carriage Pin Spring	2
26	SP-F17008PH	Plow Side Hitch	1
27	SP-17019	Upper Adjustable Arm	2
28	SP-F17024LLS	Left Lower Spring Arm	1
29	17379	1/2-13 x 1-1/4 Flange Bolt Grade 5	6
30	17345	1/2-13 Flange Nut	6
31	SP-F17016PL	Spring Plate	1
32	SP-F17025RLS	Right Lower Spring Arm	1
33	17344	3/8-16 x 1 Flange Bolt Grade 5	8
34	37341	3/8-16 Serrated Flange Nut	8

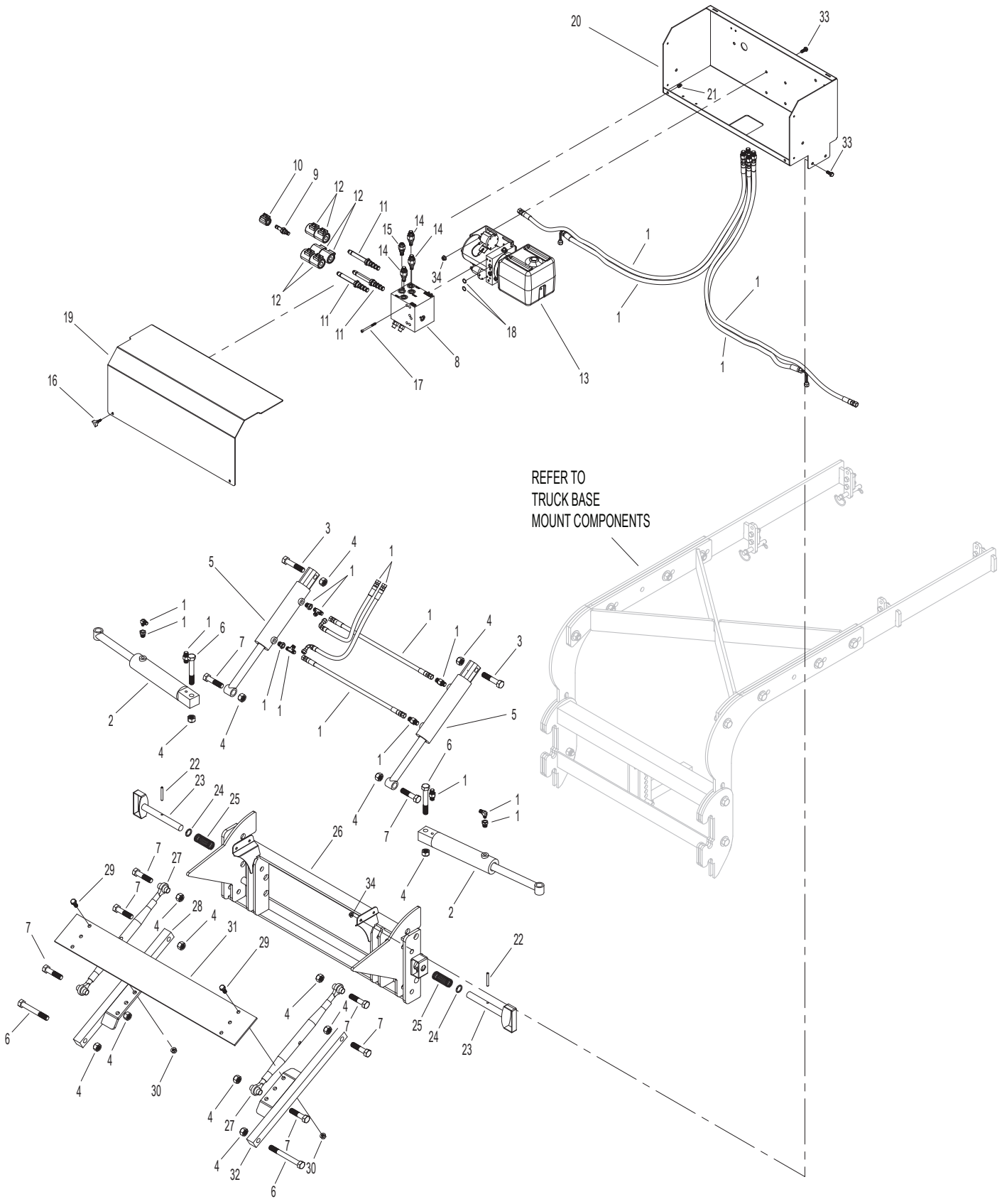
REFER TO
TRUCK BASE
MOUNT COMPONENTS

TRUCK BASE MOUNT COMPONENTS

	Part Number	Description	Quantity
1	17363	3/4-10 x 3 Hex Cap Screw	12
2	33864	3/4 x 2 OD Flat Washer	40
3	17213	1/2-13 x 2-1/2 Hex Cap Screw	8
4	SP-F17048	Hitch Rail Bracket	4
5	17187	1/2-13 Nylock Nut	8
6	SP-F17012LR	Left Hitch Rail	1
7	SP-F17009	90° Hitch Attachment	2
8	SP-F17011C	Center Cross Member	1
9	SP-F17001VH	Vehicle Side Hitch	1
10	17190	3/4-10 Nylock Nut	12
11	SP-F17013RR	Right Hitch Rail	1
12	SP-F17018RP	Receiver Support Pin	1
13	SP-F17017RS	Receiver Support	1
14	SP-F17014PIN	Hitch Rail Pin	4

TRUCK BASE MOUNT COMPONENTS

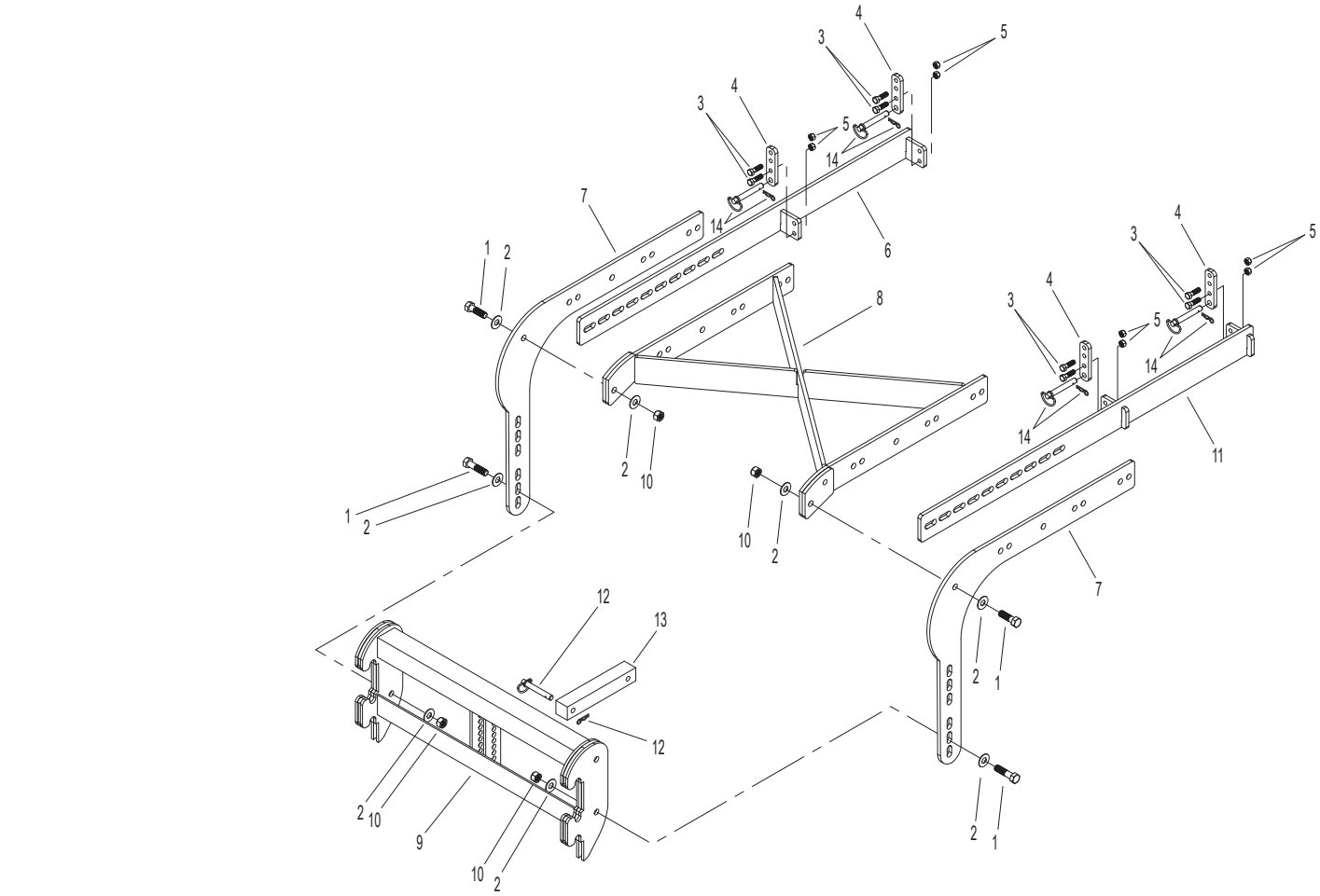

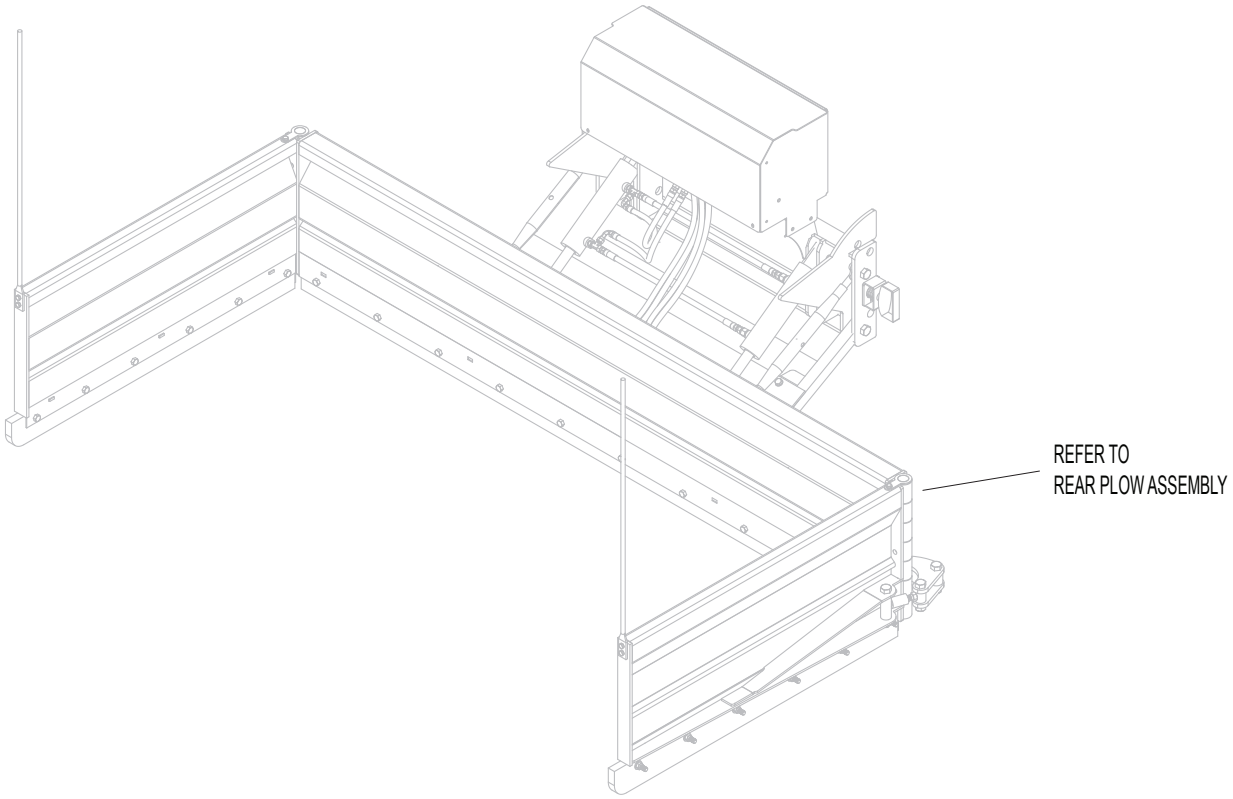

	Part Number	Description	Quantity
1	95911	1/4-20 Serrated Flange Nut	8
2	SP-PM101	Control Module	1
3	17053	5/16-18 x 3/4 Serrated Flange Bolt	2
4	SP-F17037	Module Bracket	1
5	SP-17061	Anderson Plug	2
6	SP-17003	Battery	1
7	11589191	1/4-20 x 3/4 Hex Serrated Flange Bolt	6
8	29572	FHP MS 1/4-20 x 1-1/4	2
9	37018	1/4-20 Nylock Nut	2
10	SP-17031	250A Fuse	1
11	20531	5/16 x 3/4 Self Threading Screw	1
12	SP-F17035	Plow Light “L” Bracket	4
13	SP-17080	Negative Battery Cable	1
14	SP-17090	Light	2
15	17107	5/16-18 Serrated Flange Nut	2
16	SP-F17071	Plow Control Harness Terminated Wires	1
17	SP-F17091	Plow Lighting Harness Terminated Wires	1
18	SP-F17095	Solenoid Ground Harness	1
19	SP-F17080	Positive/Negative Power Cable Set	1
20	SP-17032	250A Fuse Holder	1
21	SP-17033	250A Fuse Holder Cover	1
22	SP-17062	Terminal Lugs (Set of 4)	1
23	SP-F17060	Heavy Power Cable - 30°	1
24	SP-17030	Circuit Breaker (200A)	1
25	SP-17085-10	Positive Battery Cable	1
26	SP-17085-14	Positive Battery Cable	1

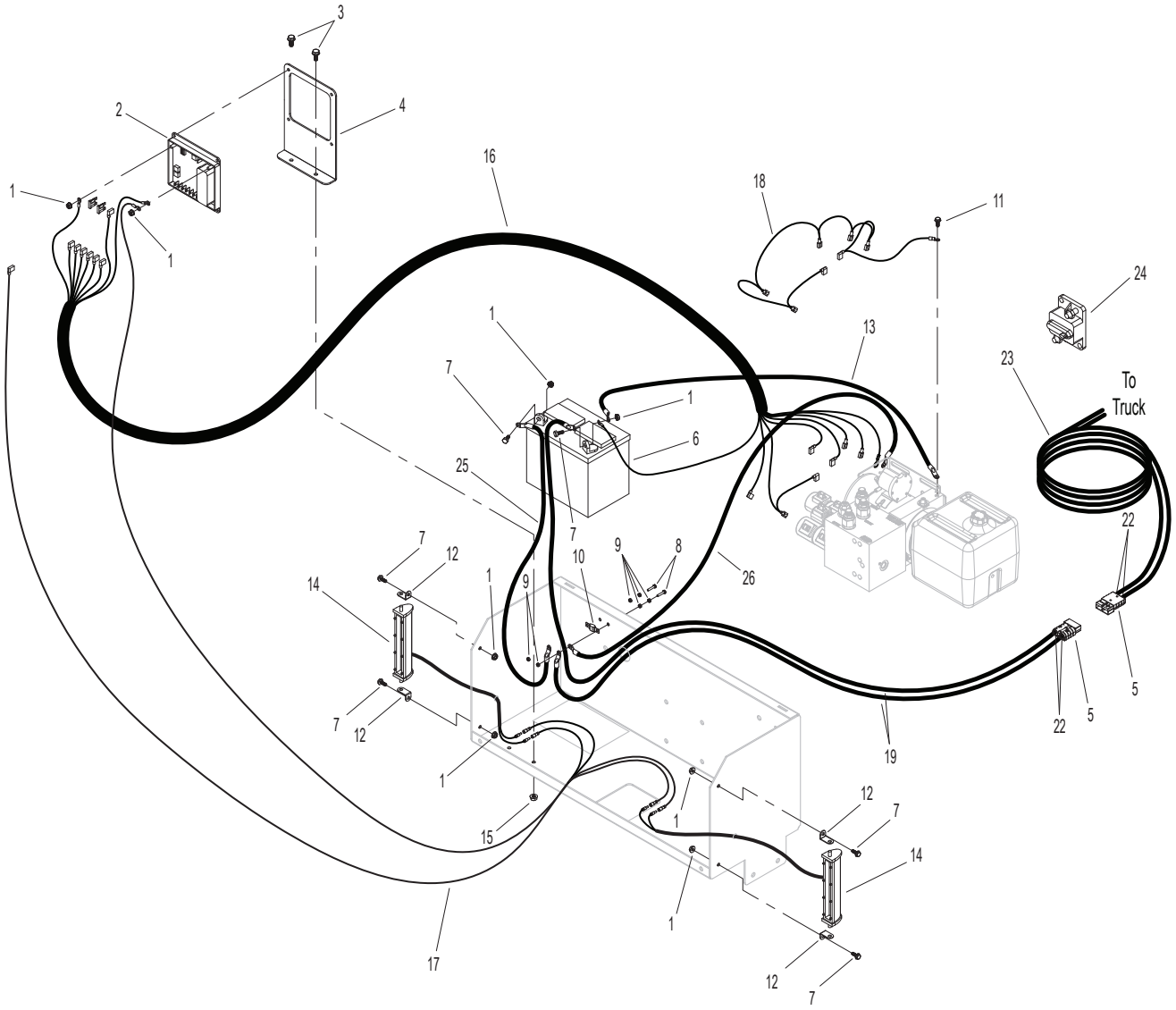
3
2
4
1
1
16
18
11
24
1
13
23
To
Truck
7
1
6
25
7
22
7
12
9
8
10
26
14
1
9
5
7
12
22
5
19
1
12
7
15
1
14
1
17
12
7

ELECTRICAL SCHEMATIC

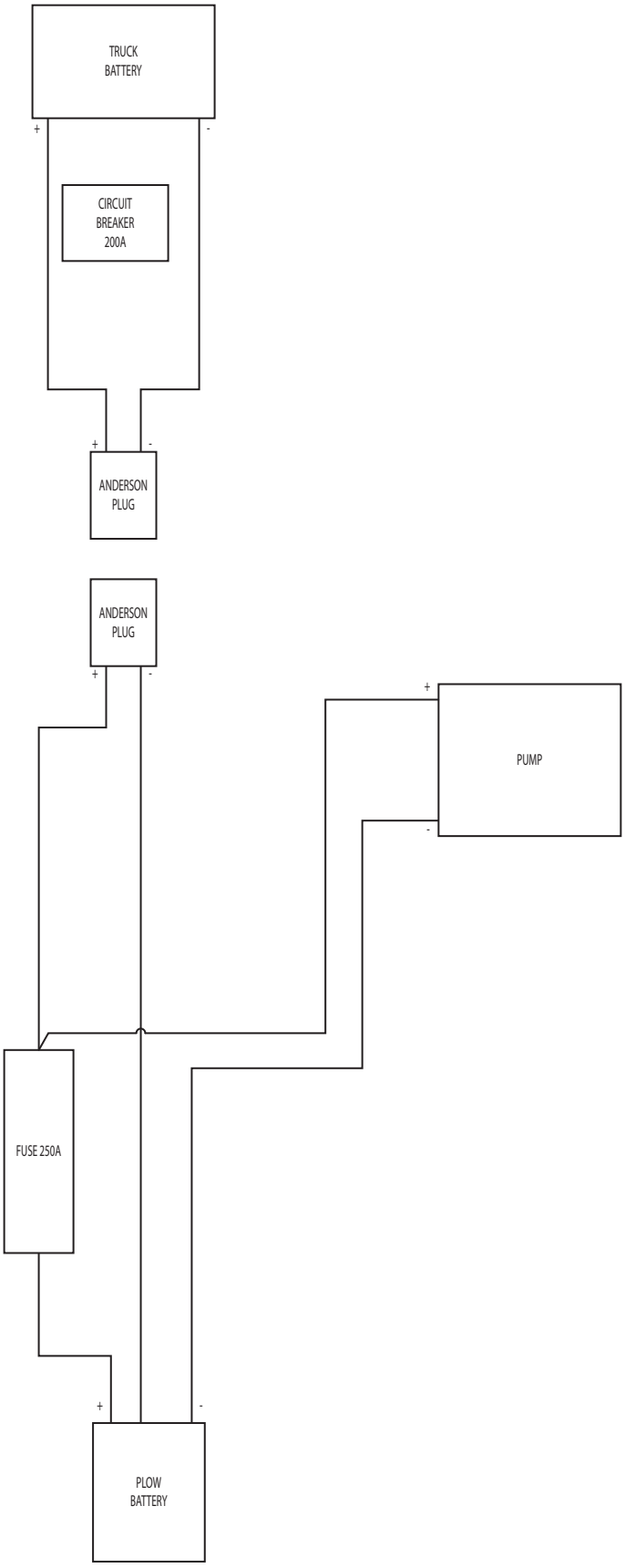

Muskegon, MI